LN-DALIREPEATER-1CH DALI Repeater

Product Specifications

Contents

1. Summarization.....2

2. Main parameter.....2

3. External Dimension.....2

4. Interface Specifications.....3

5. Direction for use.....3

6. Typical Application.....4

1. Summarization

DALI repeater adopt advanced computer control chip, this product can enhance DALI signal, expand DALI signal transmission distance, can expand the DALI signal transmission distance from 300m to 600m, can use for build DALI Star Network.

2. Technical parameters

2.1 Power supply: AC100-240V
2.2 Input signal: Standard DALI signal
2.3 Output signal: Standard DALI signal
2.4 Input current: ≤3mA
2.5 Output current: ≤250mA
2.6 Packing size: L150×W55×H50 mm
2.7 Connection mode: Spring loaded from the screw connection mode, Terminal diameter 2.6mm
2.8 Working temperature: -20-60 ℃
2.9 IP protect ion grade: IP20

3. Interface Specifications:

AC power input and DALI signal input

DALI signal output

5. Direction for use:

5.1 DC17V power inside the DALI repeater, The output signal DALI power supply units outside the end without quota
5.2 Connect the signal wire first, then the output signal wire, finally the power wire; Please ensure short circuit can not occur between connecting wire before you turn on the power;

5.3 red indicator light: Power light, Normally on representative internal switch power supply is normal work

5.4 Green indicator light: the signal indicator light, Normally on represents a signal input, Shine on behalf of the normal communication

5.5 Because signal delay, so in one line can not connect multiple DALI signal repeaters.

5.6 64 DALI address can set in DALI BUS, original DALI BUS maximum control equipment number is the same.

6.Typical Application

Signal host mode:

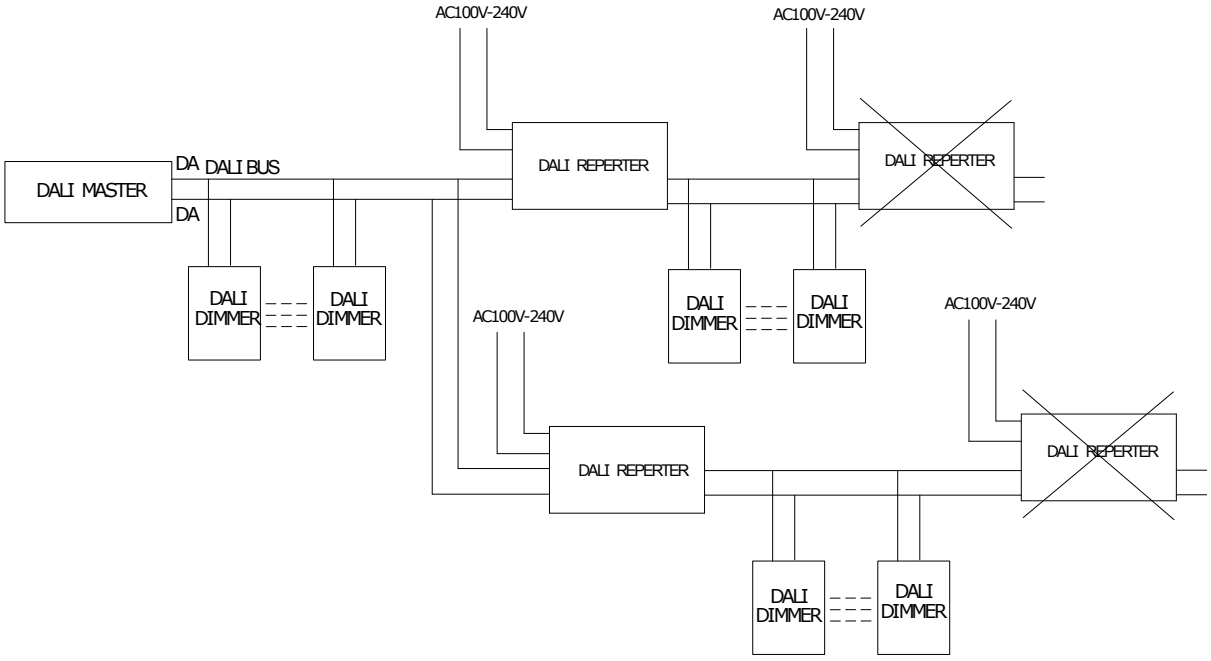
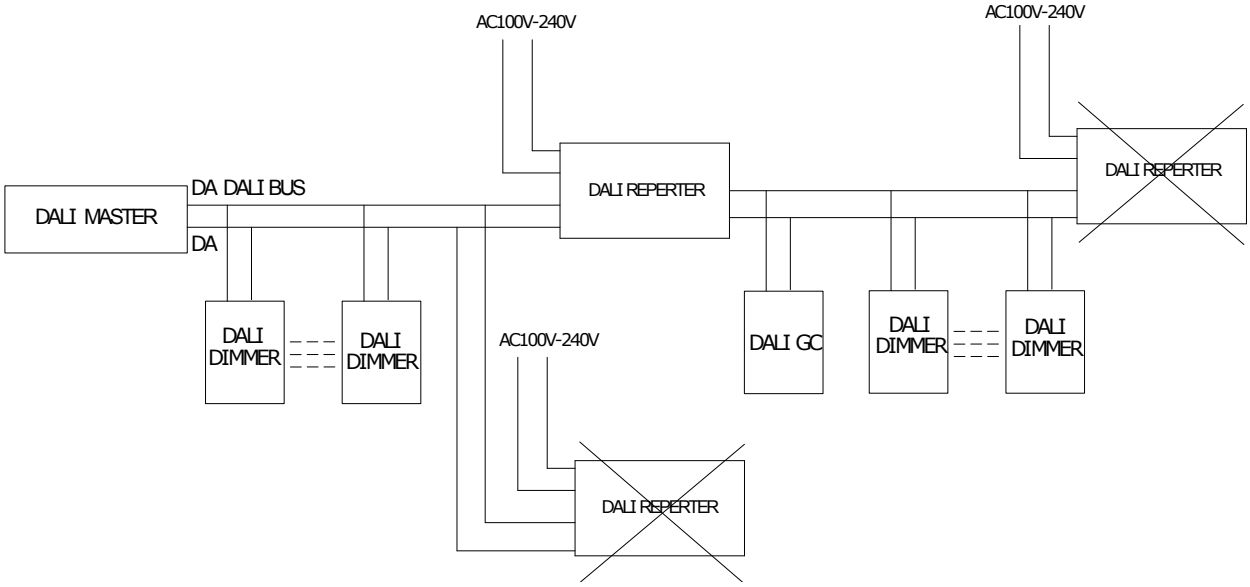
Multiple host mode: